Bangladesh Army University of Engineering & Technology
Department of Electrical & Electronic Engineering

Lecture: 30 - 34

Course Code: EEE 1261

Course Title: Electronic Devices and Circuits

Course Teacher: Ferdous Farjana

Designation: Lecturer, Dept. of EEE, BAUET

Contents

❖Field Effect-Transistors:

- ✓Introduction
- ✓Construction and Characteristics of JFETs
- ✓Transfer Characteristics
- ✓Mathematical Problems

Reference Books

- **Electronic Devices and Circuit Theory: Robert L. Boylestad and Louis Nashelsky.**
- Fundamentals of Electric circuits: Charles K. Alexander, Matthew N. O Sadiku.
- Electronic Principles: Albert P. Malvino.

- Micro Electronics Circuits: Adel S. Sedra & Keneth C. Smith: Oxford University Press.
- Operational Amplifiers and Linear Integrated Circuits: Robert F. Coughlin: Prentice Hall of India Private Limited.

Chapter 6: Field Effect-Transistors

Electronic Devices and Circuit Theory – Robert L. Boylestad and Louis Nashelsky

6.1 INTRODUCTION

The field-effect transistor (FET) is a three-terminal device used for a variety of applications that match, to a large extent, those of the BJT transistor described in Chapters 3 through 5. Although there are important differences between the two types of devices, there are also

Just as there are *npn* and *pnp* bipolar transistors, there are *n-channel* and *p-channel* field-effect transistors. However, it is important to keep in mind that the BJT transistor is a *bipolar* device—the prefix *bi* indicates that the conduction level is a function of two charge carriers, electrons and holes. The FET is a *unipolar* device depending solely on either electron (*n*-channel) or hole (*p*-channel) conduction.

The term *field effect* in the name deserves some explanation. We are all familiar with the ability of a permanent magnet to draw metal filings to itself without the need for actual contact. The magnetic field of the permanent magnet envelopes the filings and attracts them to the magnet along the shortest path provided by the magnetic flux lines. For the FET an *electric field* is established by the charges present, which controls the conduction path of the output circuit without the need for direct contact between the controlling and controlled quantities.

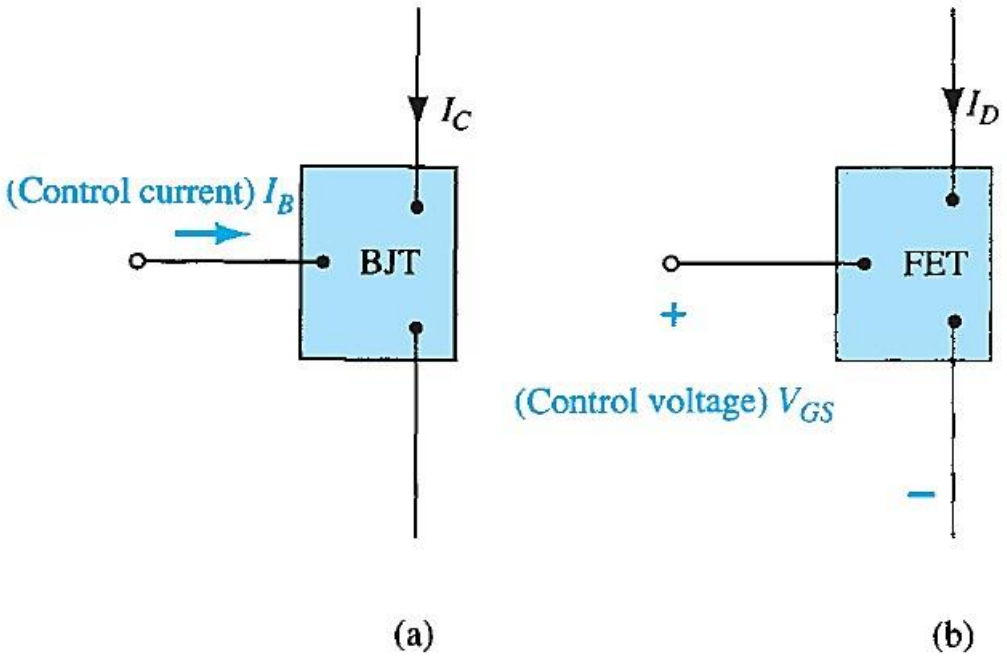

FIG. 6.1
(a) Current-controlled and (b) voltage-controlled amplifiers.

There is a natural tendency when introducing a device with a range of applications similar to one already introduced to compare some of the general characteristics of one to those of the other:

6.2 CONSTRUCTION AND CHARACTERISTICS OF JFETs

As indicated earlier, the JFET is a three-terminal device with one terminal capable of controlling the current between the other two. In our discussion of the BJT transistor the *npn* transistor was employed through the major part of the analysis and design sections, with a section devoted to the effect of using a *pnp* transistor. For the JFET transistor the *n*-channel device will be the prominent device, with paragraphs and sections devoted to the effect of using a *p*-channel JFET.

The basic construction of the *n*-channel JFET is shown in Fig. 6.3. Note that the major part of the structure is the *n*-type material, which forms the channel between the embedded layers of *p*-type material. The top of the *n*-type channel is connected through an ohmic contact to a terminal referred to as the *drain (D)*, whereas the lower end of the same material is connected through an ohmic contact to a terminal referred to as the *source (S)*. The two *p*-type materials are connected together and to the *gate (G)* terminal. In essence, therefore, the drain and the source are connected to the ends of the *n*-type channel and the gate to the two layers of *p*-type material. In the absence of any applied potentials the JFET has two *p–n* junctions under no-bias conditions. The result is a depletion region at each junction, as shown in Fig. 6.3, that resembles the same region of a diode under no-bias conditions. Recall also that a depletion region is void of free carriers and is therefore unable to support conduction.

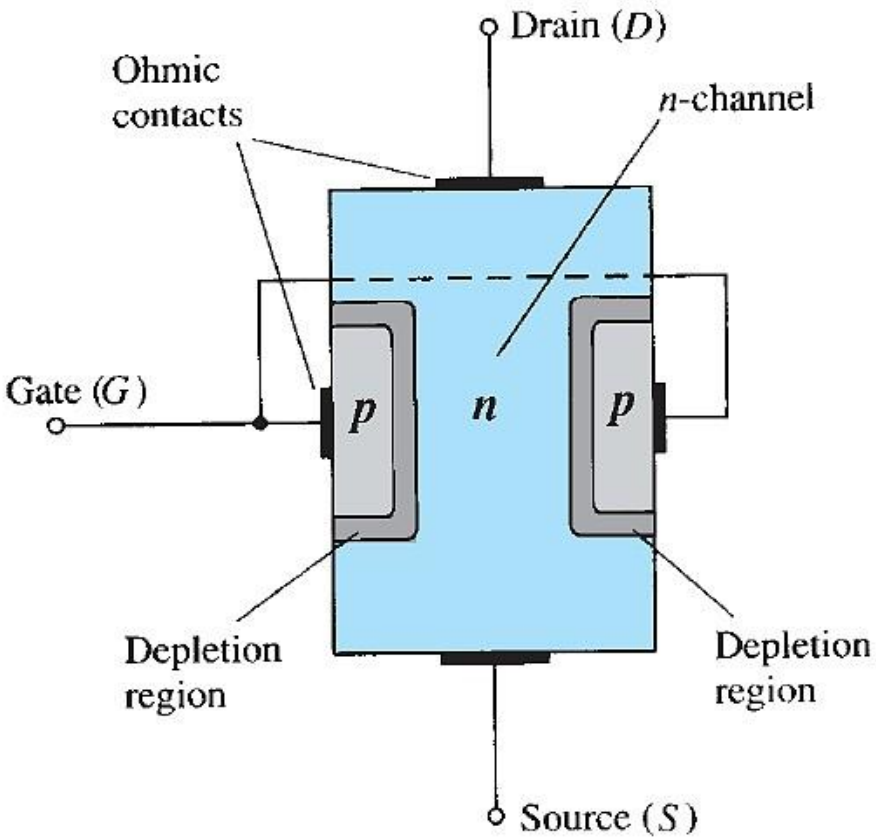

FIG. 6.3
Junction field-effect transistor (JFET).

Analogies are seldom perfect and at times can be misleading, but the water analogy of Fig. 6.4 does provide a sense for the JFET control at the gate terminal and the appropriateness of the terminology applied to the terminals of the device. The source of water pressure can be likened to the applied voltage from drain to source, which establishes a flow of water (electrons) from the spigot (source). The "gate," through an applied signal (potential), controls the flow of water (charge) to the "drain." The drain and source terminals are at opposite ends of the *n*-channel as introduced in Fig. 6.3 because the terminology is defined for electron flow.

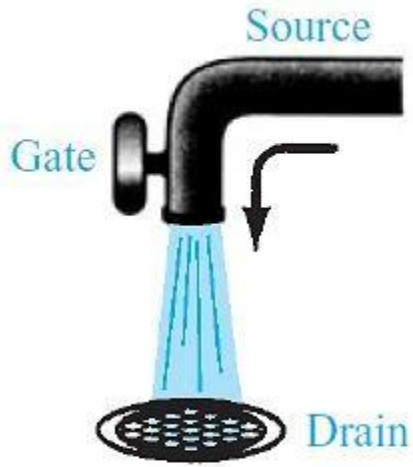

FIG. 6.4
Water analogy for the JFET control mechanism.

$V_{GS} = 0$ V, V_{DS} Some Positive Value

In Fig. 6.5, a positive voltage V_{DS} is applied across the channel and the gate is connected directly to the source to establish the condition $V_{GS} = 0$ V. The result is a gate and a source terminal at the same potential and a depletion region in the low end of each *p*-material similar to the distribution of the no-bias conditions of Fig. 6.3. The instant the voltage V_{DD} ($=V_{DS}$) is applied, the electrons are drawn to the drain terminal, establishing the conventional current I_D with the defined direction of Fig. 6.5. The path of charge flow clearly reveals that the drain and source currents are equivalent ($I_D = I_S$). Under the conditions in Fig. 6.5, the flow of charge is relatively uninhibited and is limited solely by the resistance of the *n*-channel between drain and source.

It is important to note that the depletion region is wider near the top of both *p*-type materials. The reason for the change in width of the region is best described through the help of Fig. 6.6. Assuming a uniform resistance in the *n*-channel, we can break down

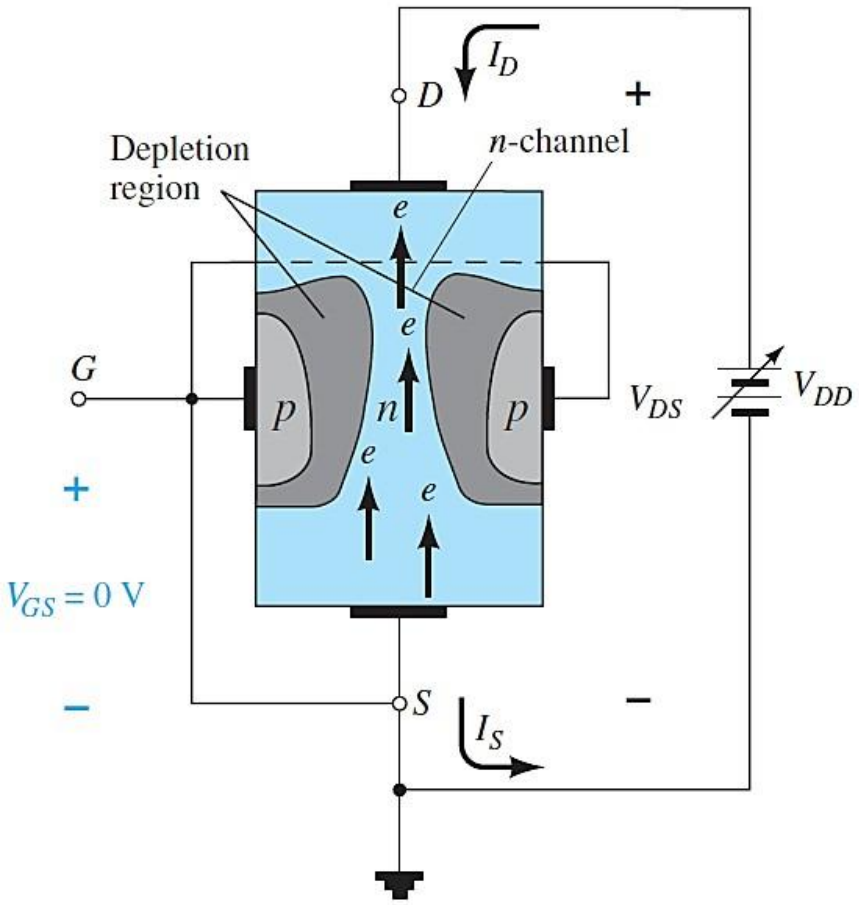

FIG. 6.5
JFET at $V_{GS} = 0$ V and $V_{DS} > 0$ V.

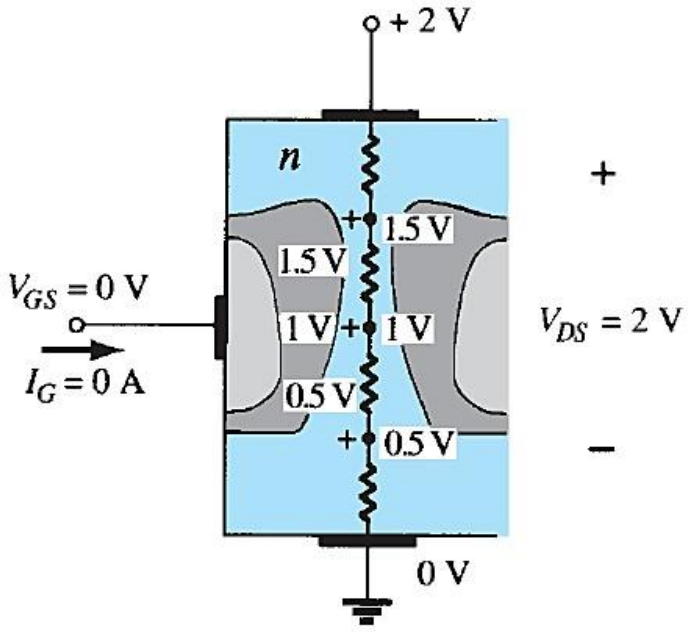

FIG. 6.6
Varying reverse-bias potentials across the p–n junction of an n-channel JFET.

the resistance of the channel into the divisions appearing in Fig. 6.6. The current I_D will establish the voltage levels through the channel as indicated on the same figure. The result is that the upper region of the *p*-type material will be reverse-biased by about 1.5 V, with the lower region only reverse-biased by 0.5 V. Recall from the discussion of the diode operation that the greater the applied reverse bias, the wider is the depletion region—hence the distribution of the depletion region as shown in Fig. 6.6. The fact that the *p–n* junction is reverse-biased for the length of the channel results in a gate current of zero amperes, as shown in the same figure. The fact that $I_G = 0$ A is an important characteristic of the JFET.

As the voltage V_{DS} is increased from 0 V to a few volts, the current will increase as determined by Ohm's law and the plot of I_D versus V_{DS} will appear as shown in Fig. 6.7. The relative straightness of the plot reveals that for the region of low values of V_{DS}, the resistance is essentially constant. As V_{DS} increases and approaches a level referred to as V_P in Fig. 6.7, the depletion regions of Fig. 6.5 will widen, causing a noticeable reduction in the channel width. The reduced path of conduction causes the resistance to increase and the curve in the graph of Fig. 6.7 to occur. The more horizontal the curve, the higher the resistance, suggesting that the resistance is approaching "infinite" ohms in the horizontal region. If V_{DS} is increased to a level where it appears that the two depletion regions would

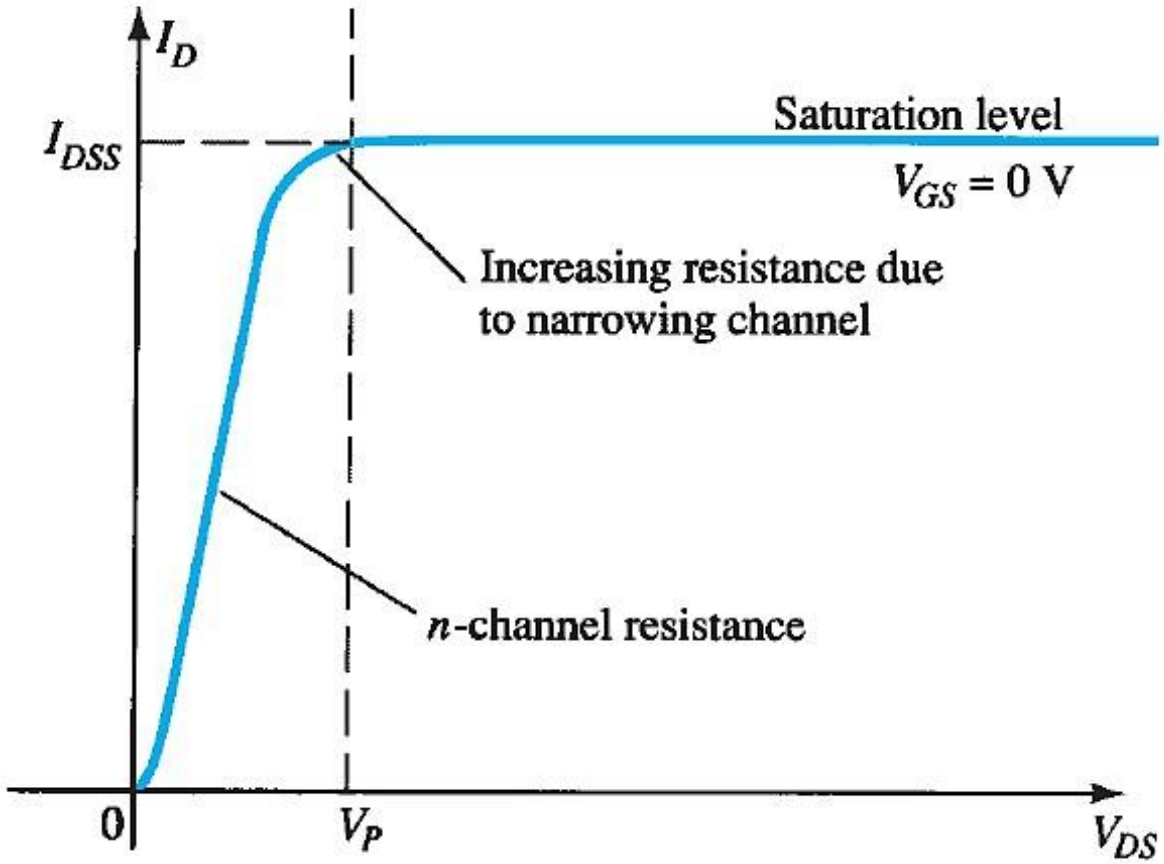

FIG. 6.7

I_D versus V_{DS} for $V_{GS} = 0$ V.

"touch" as shown in Fig. 6.8, a condition referred to as *pinch-off* will result. The level of V_{DS} that establishes this condition is referred to as the *pinch-off voltage* and is denoted by V_P, as shown in Fig. 6.7. In actuality, the term *pinch-off* is a misnomer in that it suggests the current I_D is pinched off and drops to 0 A. As shown in Fig. 6.7, however, this is hardly the case— I_D maintains a saturation level defined as I_{DSS} in Fig. 6.7. In reality a very small channel still exists, with a current of very high density. The fact that I_D does not drop off at pinch-off and maintains the saturation level indicated in Fig. 6.7 is verified by the following fact: The absence of a drain current would remove the possibility of different potential levels through the *n*-channel material to establish the varying levels of reverse bias along the *p–n* junction. The result would be a loss of the depletion region distribution that caused pinch-off in the first place.

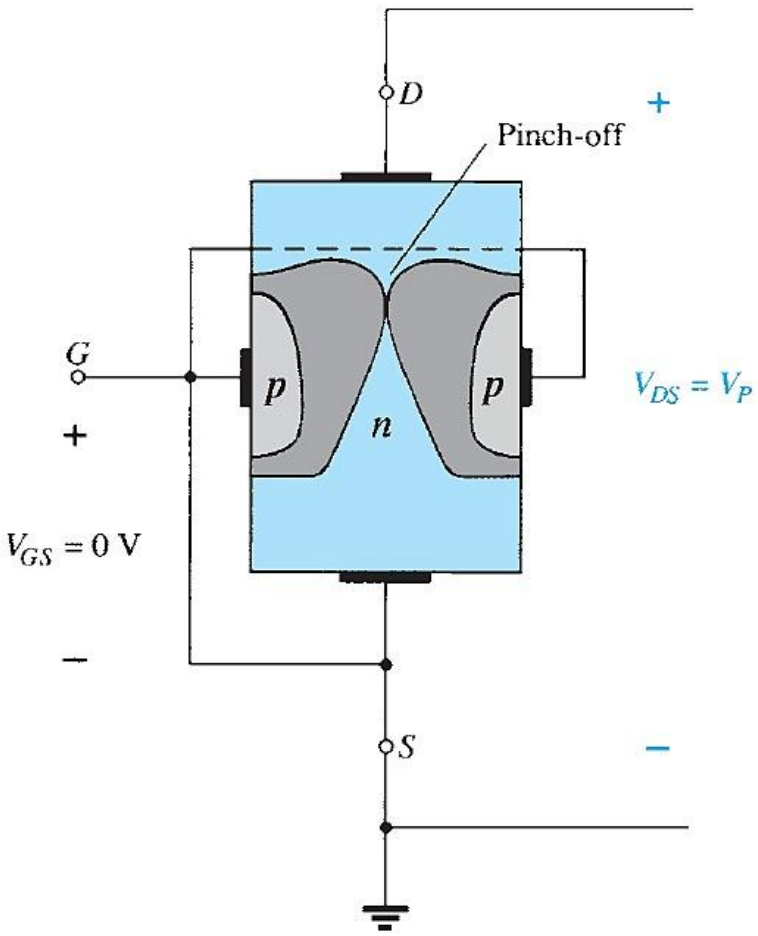

FIG. 6.8
Pinch-off ($V_{GS} = 0$ V, $V_{DS} = V_P$).

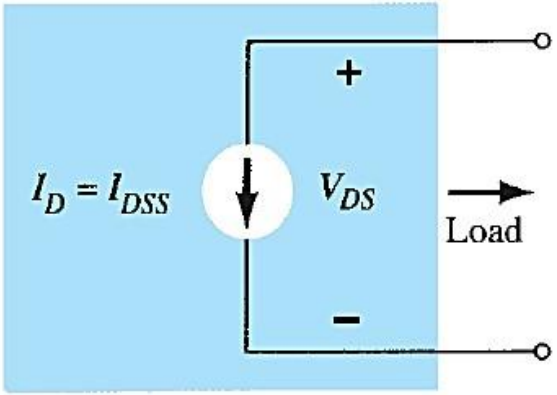

FIG. 6.9
Current source equivalent for $V_{GS} = 0$ V, $V_{DS} > V_P$.

As V_{DS} is increased beyond V_P, the region of close encounter between the two depletion regions increases in length along the channel, but the level of I_D remains essentially the same. In essence, therefore, once $V_{DS} > V_P$ the JFET has the characteristics of a current source. As shown in Fig. 6.9, the current is fixed at $I_D = I_{DSS}$, but the voltage V_{DS} (for levels $> V_P$) is determined by the applied load.

The choice of notation I_{DSS} is derived from the fact that it is the *d*rain-to-*s*ource current with a *s*hort-circuit connection from gate to source. As we continue to investigate the characteristics of the device we will find that:

I_{DSS} is the maximum drain current for a JFET and is defined by the conditions $V_{GS} = 0$ V and $V_{DS} > |V_P|$.

Note in Fig. 6.7 that $V_{GS} = 0$ V for the entire length of the curve. The next few paragraphs will describe how the characteristics of Fig. 6.7 are affected by changes in the level of V_{GS}.

$V_{GS} < 0$ V

The voltage from gate to source, denoted V_{GS}, is the controlling voltage of the JFET. Just as various curves for I_C versus V_{CE} were established for different levels of I_B for the BJT transistor, curves of I_D versus V_{DS} for various levels of V_{GS} can be developed for the JFET. For the *n*-channel device the controlling voltage V_{GS} is made more and more negative from its $V_{GS} = 0$ V level. In other words, the gate terminal will be set at lower and lower potential levels as compared to the source.

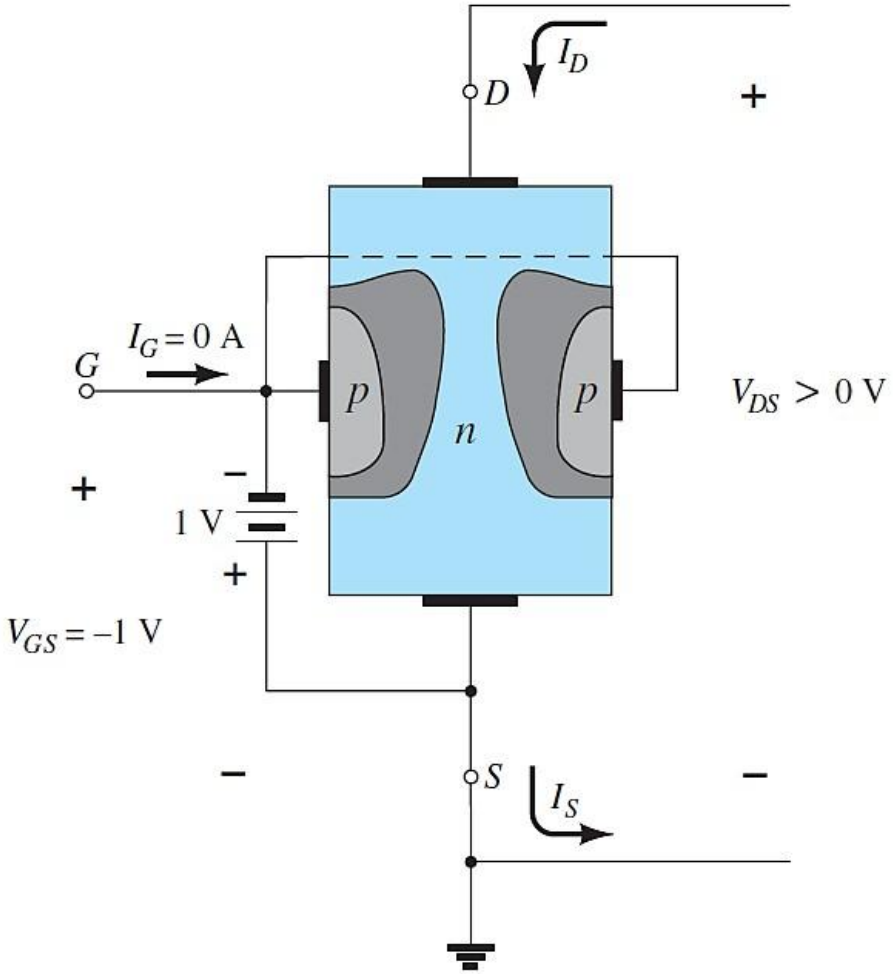

FIG. 6.10
Application of a negative voltage to the gate of a JFET.

In Fig. 6.10 a negative voltage of -1 V is applied between the gate and source terminals for a low level of V_{DS}. The effect of the applied negative-bias V_{GS} is to establish depletion regions similar to those obtained with $V_{GS} = 0$ V, but at lower levels of V_{DS}. Therefore, the result of applying a negative bias to the gate is to reach the saturation level at a lower level of V_{DS}, as shown in Fig. 6.11 for $V_{GS} = -1$ V. The resulting saturation level for I_D has been reduced and in fact will continue to decrease as V_{GS} is made more and more negative. Note also in Fig. 6.11 how the pinch-off voltage continues to drop in a parabolic manner as V_{GS} becomes more and more negative. Eventually, V_{GS} when $V_{GS} = -V_P$ will be sufficiently negative to establish a saturation level that is essentially 0 mA, and for all practical purposes the device has been "turned off." In summary:

The level of V_{GS} that results in $I_D = 0$ mA is defined by $V_{GS} = V_P$, with V_P being a negative voltage for n-channel devices and a positive voltage for p-channel JFETs.

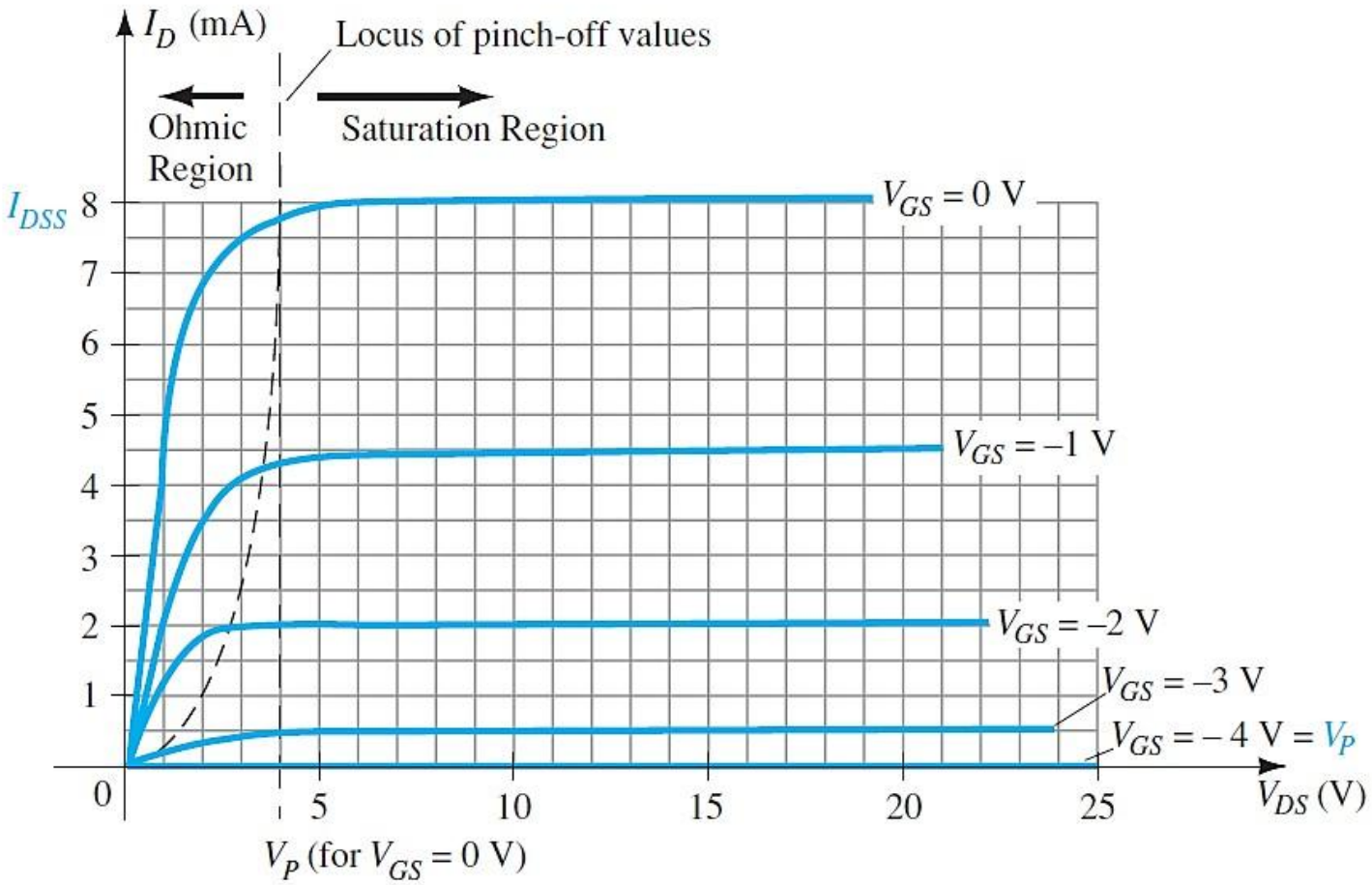

FIG. 6.11

n-Channel JFET characteristics with $I_{DSS} = 8$ mA and $V_P = -4$ V.

On most specification sheets the pinch-off voltage is specified as $V_{GS(\text{off})}$ rather than V_P. A specification sheet will be reviewed later in the chapter when the majority of the controlling elements have been introduced. The region to the right of the pinch-off locus of Fig. 6.11 is the region typically employed in linear amplifiers (amplifiers with minimum distortion of the applied signal) and is commonly referred to as the *constant-current, saturation,* or *linear amplification region.*

Voltage-Controlled Resistor

The region to the left of the pinch-off locus of Fig. 6.11 is referred to as the *ohmic* or *voltage-controlled resistance region.* In this region the JFET can actually be employed as a variable resistor (possibly for an automatic gain control system) whose resistance is controlled by the applied gate-to-source voltage. Note in Fig. 6.11 that the slope of each curve and therefore the resistance of the device between drain and source for $V_{DS} < V_P$ are a function of the applied voltage V_{GS}. As V_{GS} becomes more and more negative, the slope of each curve becomes more and more horizontal, corresponding to an increasing resistance level. The following equation provides a good first approximation to the resistance level in terms of the applied voltage V_{GS}:

$$\boxed{r_d = \frac{r_o}{(1 - V_{GS}/V_P)^2}} \tag{6.1}$$

where r_o is the resistance with $V_{GS} = 0$ V and r_d is the resistance at a particular level of V_{GS}.

For an n-channel JFET with $r_o = 10\ \text{k}\Omega$ ($V_{GS} = 0$ V, $V_P = -6$ V), Eq. (6.1) results in 40 kΩ at $V_{GS} = -3$ V.

p-Channel Devices

The p-channel JFET is constructed in exactly the same manner as the n-channel device of Fig. 6.3 but with a reversal of the p- and n-type materials as shown in Fig. 6.12. The defined current directions are reversed, as are the actual polarities for the voltages V_{GS} and V_{DS}. For the p-channel device, the channel will be constricted by increasing positive voltages from gate to source and the double-subscript notation for V_{DS} will result in negative voltages for V_{DS} on the characteristics of Fig. 6.13, which has an I_{DSS} of 6 mA and a pinch-off voltage of $V_{GS} = +6$ V. Do not let the minus signs for V_{DS} confuse you. They simply indicate that the source is at a higher potential than the drain.

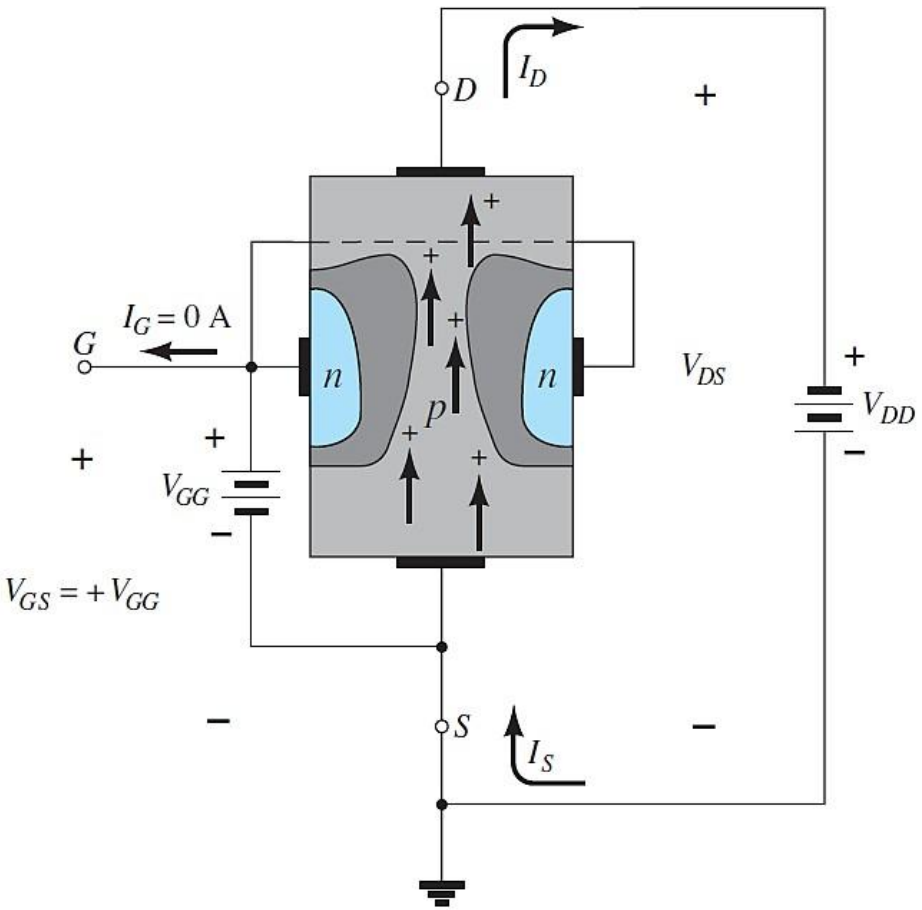

FIG. 6.12
p-Channel JFET.

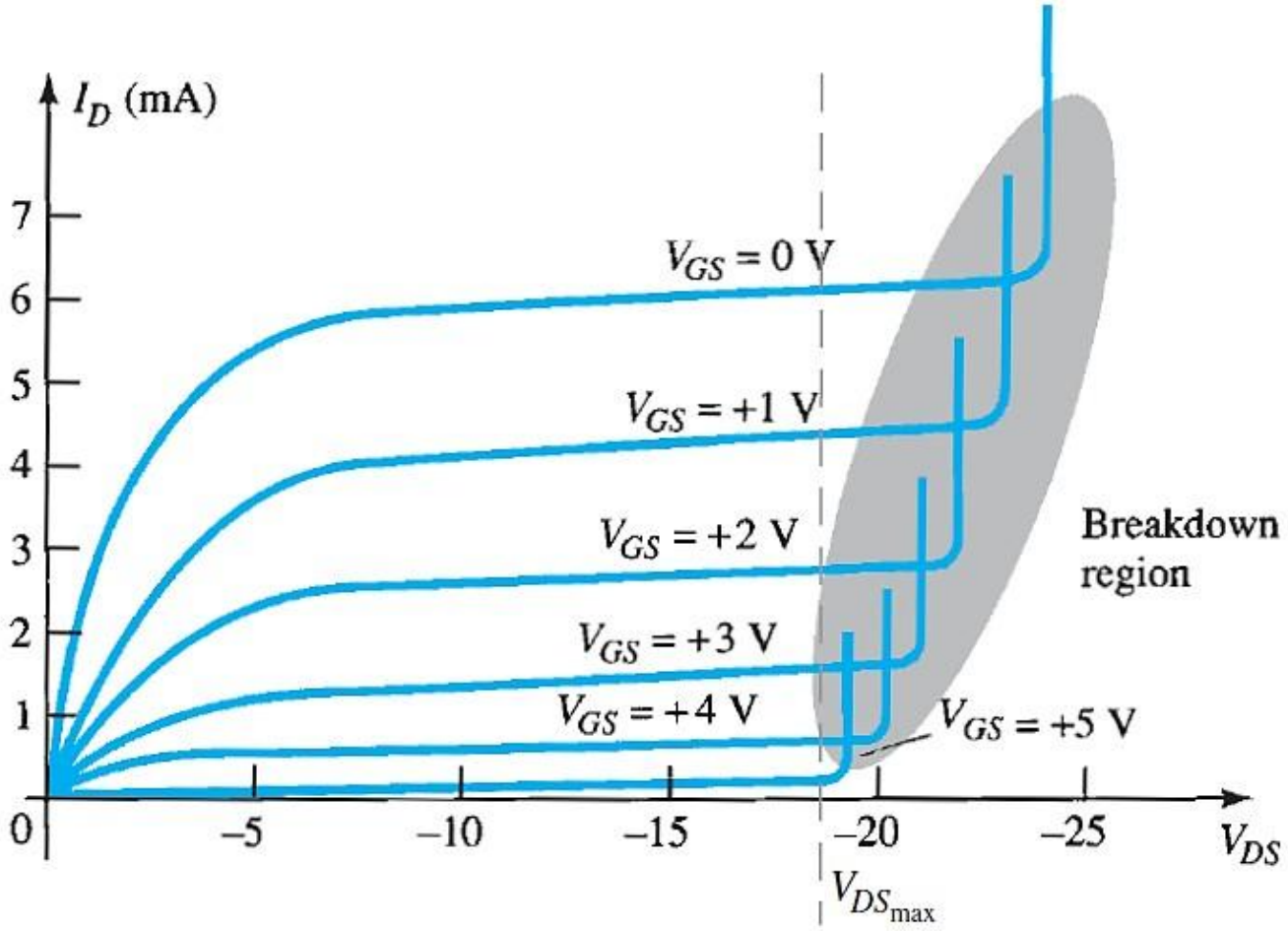

FIG. 6.13

p-Channel JFET characteristics with $I_{DSS} = 6$ mA and $V_P = +6$ V.

Note at high levels of V_{DS} that the curves suddenly rise to levels that seem unbounded. The vertical rise is an indication that breakdown has occurred and the current through the channel (in the same direction as normally encountered) is now limited solely by the external circuit. Although not appearing in Fig. 6.11 for the *n*-channel device, they do occur for the *n*-channel device if sufficient voltage is applied. This region can be avoided if the level of $V_{DS_{\max}}$ is noted on the specification sheet and the design is such that the actual level of V_{DS} is less than this value for *all* values of V_{GS}.

Symbols

The graphic symbols for the *n*-channel and *p*-channel JFETs are provided in Fig. 6.14. Note that the arrow is pointing in for the *n*-channel device of Fig. 6.14a to represent the direction in which I_G would flow if the *p–n* junction were forward-biased. For the *p*-channel device (Fig. 6.14b) the only difference in the symbol is the direction of the arrow in the symbol.

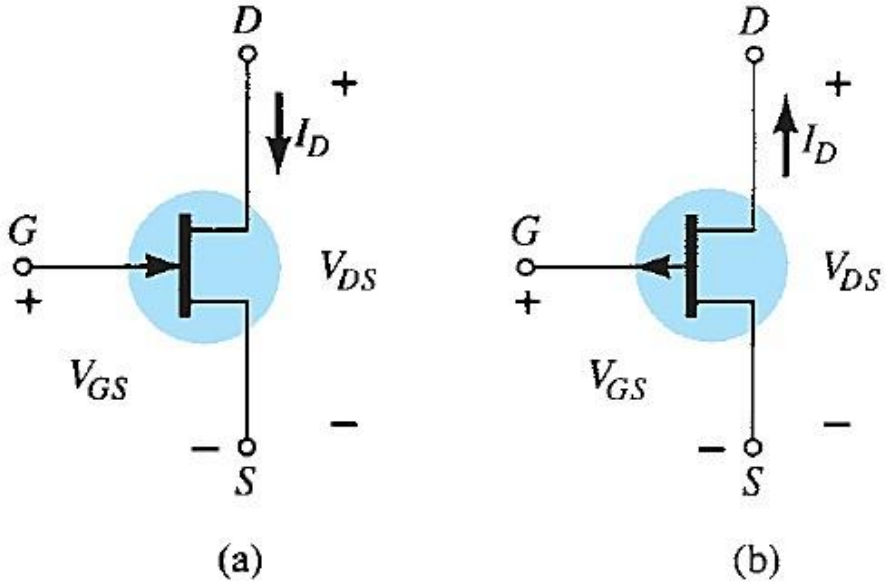

FIG. 6.14
JFET symbols: (a) n-channel; (b) p-channel.

Summary

A number of important parameters and relationships were introduced in this section. A few that will surface frequently in the analysis to follow in this chapter and the next for *n*-channel JFETs include the following:

The maximum current is defined as I_{DSS} and occurs when $V_{GS} = 0$ V and $V_{DS} \geq |V_P|$, as shown in Fig. 6.15a.

For gate-to-source voltages V_{GS} is less than (more negative than) the pinch-off level, the drain current is 0 A ($I_D = 0$ A), as in Fig. 6.15b.

For all levels of V_{GS} between 0 V and the pinch-off level, the current I_D will range between I_{DSS} and 0 A, respectively, as in Fig. 6.15c.

A similar list can be developed for p-channel JFETs.

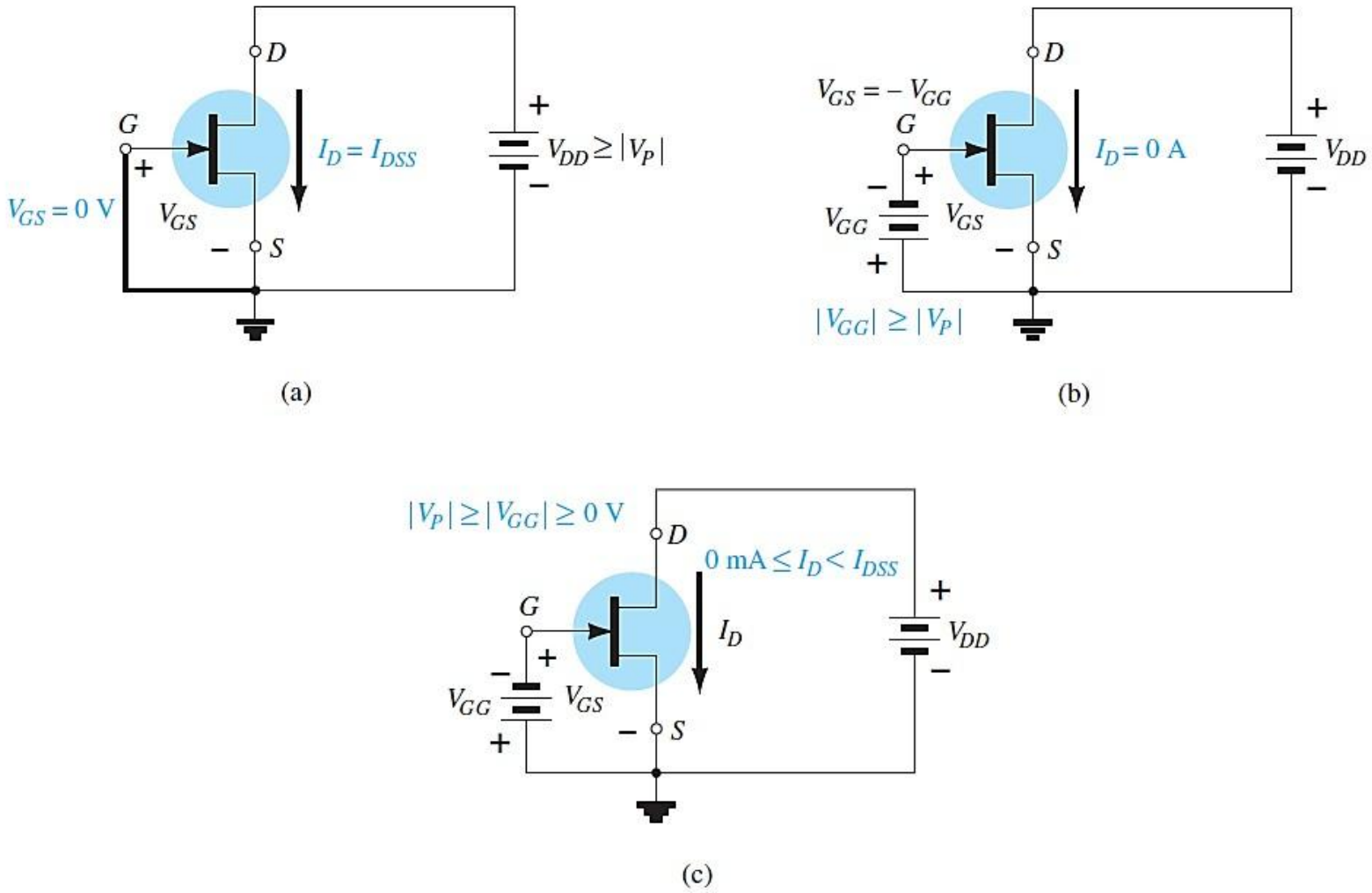

FIG. 6.15

(a) $V_{GS} = 0$ V, $I_D = I_{DSS}$; (b) cutoff ($I_D = 0$ A) V_{GS} less than the pinch-off level; (c) I_D is between 0 A and I_{DSS} for $V_{GS} \leq 0$ V and greater than the pinch-off level.

6.3 TRANSFER CHARACTERISTICS

Derivation

For the BJT transistor the output current I_C and the input controlling current I_B are related by beta, which was considered constant for the analysis to be performed. In equation form,

control variable

$$\boxed{I_C = f(I_B) = \beta I_B} \tag{6.2}$$

constant

In Eq. (6.2) a linear relationship exists between I_C and I_B. Double the level of I_B and I_C will increase by a factor of two also.

Unfortunately, this linear relationship does not exist between the output and input quantities of a JFET. The relationship between I_D and V_{GS} is defined by *Shockley's equation* (see Fig. 6.16):

control variable

$$\boxed{I_D = I_{DSS}\left(1 - \frac{V_{GS}}{V_P}\right)^2} \tag{6.3}$$

constants

The squared term in the equation results in a nonlinear relationship between I_D and V_{GS}, producing a curve that grows exponentially with decreasing magnitude of V_{GS}.

For the dc analysis to be performed in Chapter 7, a graphical rather than a mathematical approach will in general be more direct and easier to apply. The graphical approach, however, will require a plot of Eq. (6.3) to represent the device and a plot of the network equation relating the same variables. The solution is defined by the point of intersection of the two curves. It is important to keep in mind when applying the graphical approach that the device characteristics will be *unaffected* by the network in which the device is employed.

The network equation may change along with the intersection between the two curves, but the transfer curve defined by Eq. (6.3) is unaffected. In general, therefore:

The transfer characteristics defined by Shockley's equation are unaffected by the network in which the device is employed.

The transfer curve can be obtained using Shockley's equation or from the output characteristics of Fig. 6.11. In Fig. 6.17 two graphs are provided, with the vertical scaling in milliamperes for each graph. One is a plot of I_D versus V_{DS}, whereas the other is I_D versus V_{GS}. Using the drain characteristics on the right of the "y" axis, we can draw a horizontal line from the saturation region of the curve denoted $V_{GS} = 0$ V to the I_D axis. The resulting current level for both graphs is I_{DSS}. The point of intersection on the I_D versus V_{GS} curve will be as shown since the vertical axis is defined as $V_{GS} = 0$ V.

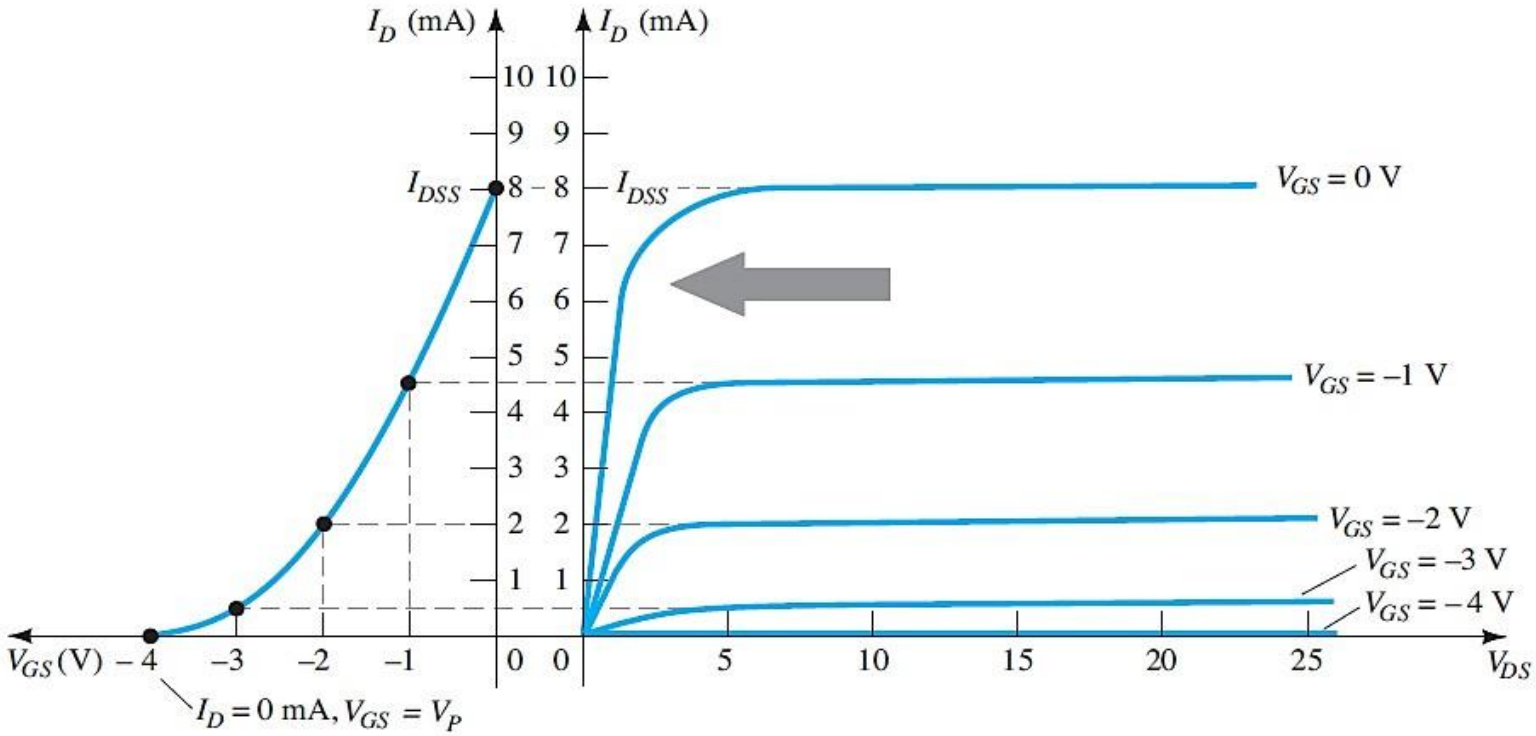

FIG. 6.17
Obtaining the transfer curve from the drain characteristics.

In review:

$$\boxed{\text{When } V_{GS} = 0\text{ V}, \quad I_D = I_{DSS}} \tag{6.4}$$

When $V_{GS} = V_P = -4$ V, the drain current is 0 mA, defining another point on the transfer curve. That is:

$$\boxed{\text{When } V_{GS} = V_P, \quad I_D = 0\text{ mA}} \tag{6.5}$$

Before continuing, it is important to realize that the drain characteristics relate one output (or drain) quantity to another output (or drain) quantity—both axes are defined by variables in the same region of the device characteristics. The transfer characteristics are a plot of an output (or drain) current versus an input-controlling quantity. There is therefore a direct "transfer" from input to output variables when employing the curve to the left of Fig. 6.17. If the relationship were linear, the plot of I_D versus V_{GS} would result in a straight line between I_{DSS} and V_P. However, a parabolic curve will result because the vertical spacing between steps of V_{GS} on the drain characteristics of Fig. 6.17 decreases noticeably as V_{GS} becomes more and more negative. Compare the spacing between $V_{GS} = 0$ V and $V_{GS} = -1$ V to that between $V_{GS} = -3$ V and pinch-off. The change in V_{GS} is the same, but the resulting change in I_D is quite different.

If a horizontal line is drawn from the $V_{GS} = -1$ V curve to the I_D axis and then extended to the other axis, another point on the transfer curve can be located. Note that $V_{GS} = -1$ V on the bottom axis of the transfer curve with $I_D = 4.5$ mA. Note in the definition of I_D at $V_{GS} = 0$ V and -1 V that the saturation levels of I_D are employed and the ohmic region ignored. Continuing with $V_{GS} = -2$ V and -3 V, we can complete the transfer curve. It is

the transfer curve of I_D versus V_{GS} that will receive extended use in the analysis of Chapter 7 and not the drain characteristics of Fig. 6.17. The next few paragraphs will introduce a quick, efficient method of plotting I_D versus V_{GS} given only the levels of I_{DSS} and V_P and Shockley's equation.

Applying Shockley's Equation

The transfer curve of Fig. 6.17 can also be obtained directly from Shockley's equation (6.3) given simply the values of I_{DSS} and V_P. The levels of I_{DSS} and V_P define the limits of the curve on both axes and leave only the necessity of finding a few intermediate plot points. The validity of Eq. (6.3) as a source of the transfer curve of Fig. 6.17 is best demonstrated by examining a few specific levels of one variable and finding the resulting level of the other as follows:

Substituting $V_{GS} = 0$ V gives

$$\text{Eq. (6.3):} \quad I_D = I_{DSS}\left(1 - \frac{V_{GS}}{V_P}\right)^2$$

$$= I_{DSS}\left(1 - \frac{0}{V_P}\right)^2 = I_{DSS}(1 - 0)^2$$

and

$$\boxed{I_D = I_{DSS}\,|_{V_{GS}=0\text{ V}}} \tag{6.6}$$

Substituting $V_{GS} = V_P$ yields

$$I_D = I_{DSS}\left(1 - \frac{V_P}{V_P}\right)^2$$
$$= I_{DSS}(1 - 1)^2 = I_{DSS}(0)$$

$$\boxed{I_D = 0\text{ A}\big|_{V_{GS}=V_P}} \tag{6.7}$$

For the drain characteristics of Fig. 6.17, if we substitute $V_{GS} = -1$ V,

$$I_D = I_{DSS}\left(1 - \frac{V_{GS}}{V_P}\right)^2$$
$$= 8\text{ mA}\left(1 - \frac{-1\text{ V}}{-4\text{ V}}\right)^2 = 8\text{ mA}\left(1 - \frac{1}{4}\right)^2 = 8\text{ mA}\,(0.75)^2$$
$$= 8\text{ mA}\,(0.5625)$$
$$= \mathbf{4.5\ mA}$$

as shown in Fig. 6.17. Note the care taken with the negative signs for V_{GS} and V_P in the calculations above. The loss of one sign would result in a totally erroneous result.

It should be obvious from the above that given I_{DSS} and V_P (as is normally provided on specification sheets), the level of I_D can be found for any level of V_{GS}. Conversely, by using basic algebra we can obtain [from Eq. (6.3)] an equation for the resulting level of V_{GS} for a given level of I_D. The derivation is quite straightforward and results in

$$\boxed{V_{GS} = V_P\left(1 - \sqrt{\frac{I_D}{I_{DSS}}}\right)} \tag{6.8}$$

Let us test Eq. (6.8) by finding the level of V_{GS} that will result in a drain current of 4.5 mA for the device with the characteristics of Fig. 6.17. We find

$$\begin{aligned} V_{GS} &= -4\text{ V}\left(1 - \sqrt{\frac{4.5\text{ mA}}{8\text{ mA}}}\right) \\ &= -4\text{ V}(1 - \sqrt{0.5625}) = -4\text{ V}(1 - 0.75) \\ &= -4\text{ V}(0.25) \\ &= \mathbf{-1\text{ V}} \end{aligned}$$

as substituted in the above calculation and verified by Fig. 6.17.

Shorthand Method

Since the transfer curve must be plotted so frequently, it would be quite advantageous to have a shorthand method for plotting the curve in the quickest, most efficient manner while maintaining an acceptable degree of accuracy. The format of Eq. (6.3) is such that specific levels of V_{GS} will result in levels of I_D that can be memorized to provide the plot points needed to sketch the transfer curve. If we specify V_{GS} to be one-half the pinch-off value V_P, the resulting level of I_D will be the following, as determined by Shockley's equation:

$$\begin{aligned} I_D &= I_{DSS}\left(1 - \frac{V_{GS}}{V_P}\right)^2 \\ &= I_{DSS}\left(\frac{1 - V_P/2}{V_P}\right)^2 = I_{DSS}\left(1 - \frac{1}{2}\right)^2 = I_{DSS}(0.5)^2 \\ &= I_{DSS}(0.25) \end{aligned}$$

and

$$\boxed{I_D = \frac{I_{DSS}}{4}\Big|_{V_{GS} = V_P/2}} \qquad \textbf{(6.9)}$$

Now it is important to realize that Eq. (6.9) is not for a particular level of V_P. It is a general equation for any level of V_P as long as $V_{GS} = V_P/2$. The result specifies that the drain current will always be one-fourth the saturation level I_{DSS} as long as the gate-to-source voltage is one-half the pinch-off value. Note the level of I_D for $V_{GS} = V_P/2 = -4\text{ V}/2 = -2\text{ V}$ in Fig. 6.17.

If we choose $I_D = I_{DSS}/2$ and substitute into Eq. (6.8), we find that

$$V_{GS} = V_P\left(1 - \sqrt{\frac{I_D}{I_{DSS}}}\right)$$

$$= V_P\left(1 - \sqrt{\frac{I_{DSS}/2}{I_{DSS}}}\right) = V_P(1 - \sqrt{0.5}) = V_P(0.293)$$

and

$$\boxed{V_{GS} \cong 0.3V_P\big|_{I_D=I_{DSS}/2}} \qquad \textbf{(6.10)}$$

Additional points can be determined, but the transfer curve can be sketched to a satisfactory level of accuracy simply using the four plot points defined above and reviewed in Table 6.1. In fact, in the analysis of Chapter 7, a maximum of four plot points are used to sketch the transfer curves. On most occasions using just the plot point defined by $V_{GS} = V_P/2$ and the axis intersections at I_{DSS} and V_P will provide a curve accurate enough for most calculations.

TABLE 6.1
V_{GS} versus I_D Using Shockley's Equation

V_{GS}	I_D
0	I_{DSS}
$0.3V_P$	$I_{DSS}/2$
$0.5V_P$	$I_{DSS}/4$
V_P	0 mA

EXAMPLE 6.1 Sketch the transfer curve defined by $I_{DSS} = 12$ mA and $V_P = -6$ V.

Solution: Two plot points are defined by

$$I_{DSS} = \mathbf{12\ mA} \quad \text{and} \quad V_{GS} = \mathbf{0\ V}$$

and

$$I_D = \mathbf{0\ mA} \quad \text{and} \quad V_{GS} = \boldsymbol{V_P}$$

At $V_{GS} = V_P/2 = -6\text{ V}/2 = \mathbf{-3\ V}$ the drain current is determined by $I_D = I_{DSS}/4 = 12\text{ mA}/4 = \mathbf{3\ mA}$. At $I_D = I_{DSS}/2 = 12\text{ mA}/2 = \mathbf{6\ mA}$ the gate-to-source voltage is determined by $V_{GS} \cong 0.3V_P = 0.3(-6\text{ V}) = \mathbf{-1.8\ V}$. All four plot points are well defined on Fig. 6.18 with the complete transfer curve.

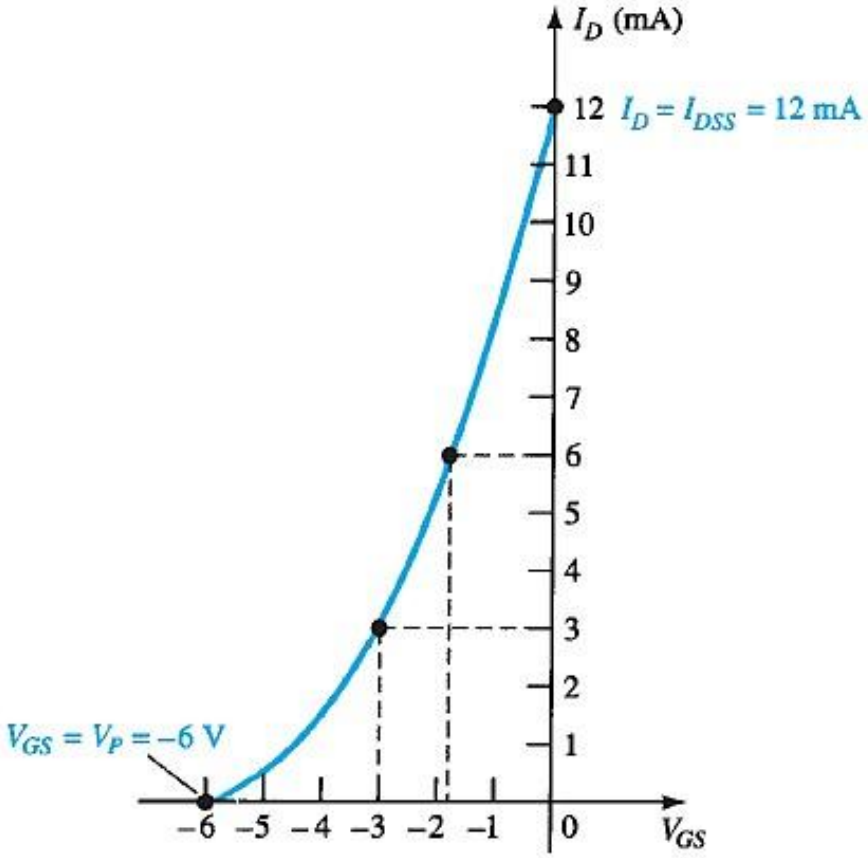

FIG. 6.18
Transfer curve for Example 6.1.

For p-channel devices Shockley's equation (6.3) can still be applied exactly as it appears. In this case, both V_P and V_{GS} will be positive and the curve will be the mirror image of the transfer curve obtained with an n-channel and the same limiting values.

EXAMPLE 6.2 Sketch the transfer curve for a p-channel device with $I_{DSS} = 4$ mA and $V_P = 3$ V.

Solution: At $V_{GS} = V_P/2 = 3\text{ V}/2 = \mathbf{1.5\ V}$, $I_D = I_{DSS}/4 = 4\text{ mA}/4 = \mathbf{1\ mA}$. At $I_D = I_{DSS}/2 = 4\text{ mA}/2 = \mathbf{2\ mA}$, $V_{GS} = 0.3V_P = 0.3(3\text{ V}) = \mathbf{0.9\ V}$. Both plot points appear in Fig. 6.19 along with the points defined by I_{DSS} and V_P.

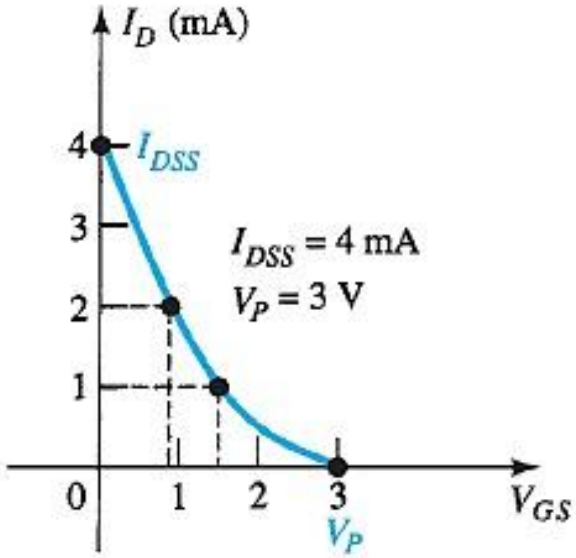

FIG. 6.19
Transfer curve for the p-channel device of Example 6.2.

THANK YOU